Angel Magnetics

ALL KIND OF **TRANSFORMER** AT ONE STOP

www.angelmagnetics.com

Angel Magnetics
Angel Magnetics

About Us

Angel Magnetics

Angel Magnetics India Pvt. Ltd. Established in the year 2015 at New Delhi (Delhi, India), we "Angel Magnetics India Pvt. Ltd." are committed towards manufacturing a quality range of Coil Inductor , Toroidal Coil Transformer , Solar Panel Transformers , R M Transformers , PQ Series Transformers , Power Supply Transformers , Line Filters , LED Transformers , Laminated Core Transformer , Ferrite Core Transformer , Common Mode Choke Coil , EDR Transformer , EE Core Transformers , E-Rickshaw Transformer , Mobile Charger Transformers , SMD Transformer , ERD Transformer , D2H Power Supply , Air Core Inductors , AF Transformer , Air-core Choke , Power Inductor , SMPS Transformer , Laminated Driver Transformer , Current Transformer etc. These products are well- known for their features such as high efficiency, optimum performance and long working life. Under strict supervision of "Mr. Vinod Kumar" (Director), we have gained huge clientele all across the nation.

WHY US

Owing to our comprehensive domain knowledge and high quality products range, we have gained huge client base all across the nation. Some of the prominent reasons for which we have become the foremost choice among the clients are:

- High quality products
- Skilled workforce
- Ethical business policies
- Easy payment modes
- Transparent dealings
- Wide distribution network

COMMON MODE CHOKES IN UU9.8 PACKAGE

Electrical Details

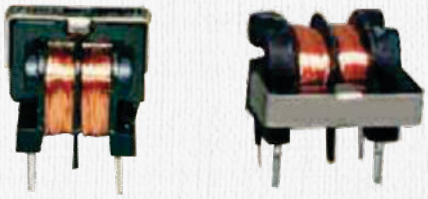

PART NUMBER	CORE MOUNTING	INDUCTANCE mH (Min)	CURRENT RATING mA (steady state)	LEAKAGE INDUCTANCE uH (Typical)	DC RESISTANCE Ohms (Max)
100801	HORIZONTAL	2.20	350	40	0.375
100802	VERTICAL	2.20	350	40	0.375
100803	HORIZONTAL	3.90	290	70	0.625
100804	VERTICAL	3.90	290	70	0.625
100805	HORIZONTAL	5.60	250	100	0.900
100806	VERTICAL	5.60	250	100	0.900
100807	HORIZONTAL	8.20	250	133	1.100
100808	VERTICAL	8.20	250	133	1.100
100809	HORIZONTAL	9.10	175	160	1.600
100810	VERTICAL	9.10	175	160	1.600
100811	HORIZONTAL	15.00	150	300	2.750
100812	VERTICAL	15.00	150	300	2.750
100813	HORIZONTAL	22.00	150	355	2.980
100814	VERTICAL	22.00	150	355	2.980
100815	HORIZONTAL	30.00	120	525	4.500
100816	VERTICAL	30.00	120	525	4.500
100817	HORIZONTAL	36.00	85	625	6.000
100818	VERTICAL	36.00	85	625	6.000

Mechanical Details: (All dimensions in mm) Not to scale

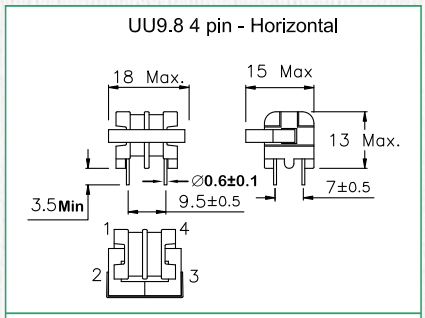

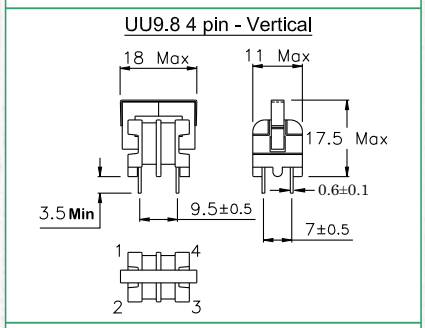

Isolation: (at 50Hz/4mA/1 min)
Between windings: 1500VAC
windings to core : 1500VAC

Insulation Test:
>100MOhms@500V DC

Identification:

AMI #

'DD MM YY' stands for Lot No.

Schematic Diagram:

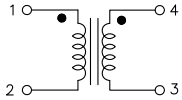

COMMON MODE CHOKES IN UU10.5 PACKAGE

PART NUMBER	INDUCTANCE mH (Min)	CURRENT RATING Amps (Steady state)	LEAKAGE INDUCTANCE uH (Typical)	DC RESISTANCE Ohms (Max)
100801	0.75	1.2	15	0.125
100802	1.5	1.0	25	0.150
100803	1.5	2.0	25	0.140
100804	2.2	0.75	40	0.225
100805	3	0.6	55	0.350
100806	5.6	0.5	105	0.575
100807	8.2	0.4	150	0.870
100808	12	0.3	240	1.500
100809	22	0.25	330	2.250
100810	39	0.2	700	3.200
100811	47	0.175	800	4.100

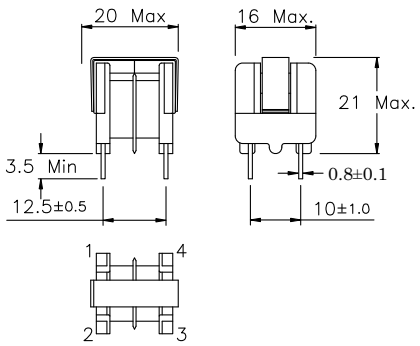

Isolation: (at 50Hz/4mA/1 min)
Between windings: 1500VAC
windings to core : 1500VAC

Insulation Test:
>100MOhms@500V DC

Identification:

AMI #

'DD MM YY' stands for Lot No.

Schematic Diagram:

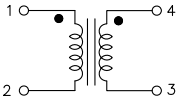

*RoHS compliance is available on most products, subject to our confirmation.

NOTE: Specifications subject to change without notice.

PACKAGE

Mechanical Details: (All dimensions in mm) Not to scale Electrical Details

MODE CHOKES IN EE2506

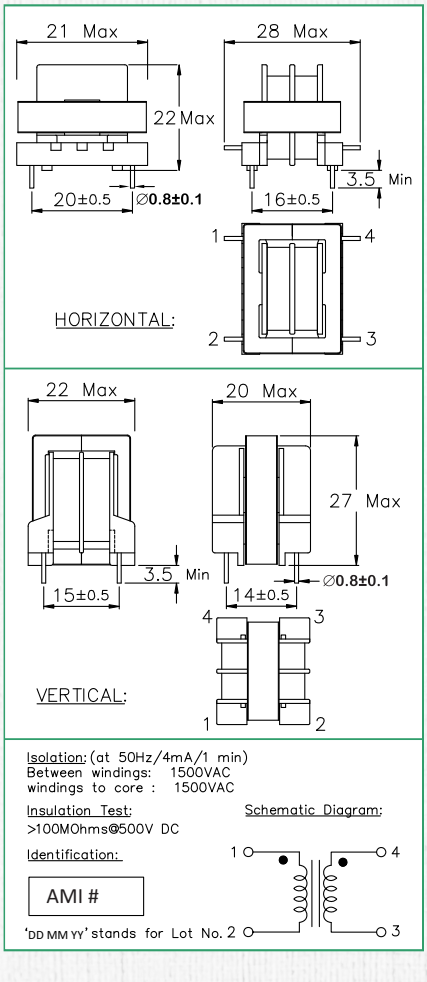

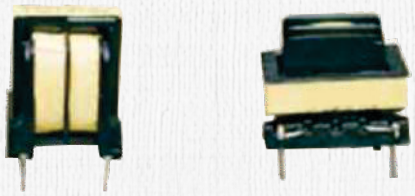

PART NUMBER	CORE MOUNTING	INDUCTANC EmH (Min)	CURRENT RATING Amps (Steady State)	LEAKAGE INDUCTANCE uH (Typical)	DC RESISTANCE Ohms (Max)
400101	HORIZONTAL	0.570	4.00	8	0.025
400102	VERTICAL	0.570	4.00	8	0.025
400103	HORIZONTAL	1.000	3.00	15	0.050
400104	VERTICAL	1.000	3.00	15	0.050
400105	HORIZONTAL	2.200	2.50	30	0.095
400106	VERTICAL	2.200	2.50	30	0.095
400107	HORIZONTAL	4.700	1.75	55	0.160
400108	VERTICAL	4.700	1.75	55	0.160
400109	VERTICAL	8.200	1.50	90	0.250
400110	HORIZONTAL	10.000	1.20	125	0.340
400111	VERTICAL	10.000	1.20	125	0.340
400112	HORIZONTAL	15.000	1.00	175	0.450
400113	VERTICAL	15.000	1.00	175	0.450
400114	HORIZONTAL	22.000	0.75	265	0.765
400115	VERTICAL	22.000	0.75	265	0.765
400116	HORIZONTAL	33.000	0.55	400	1.450
400117	VERTICAL	33.000	0.55	400	1.450
400118	HORIZONTAL	47.000	0.45	520	1.900
400119	VERTICAL	47.000	0.45	520	1.900

COMMON MODE CHOKES IN EE3007 PACKAGE

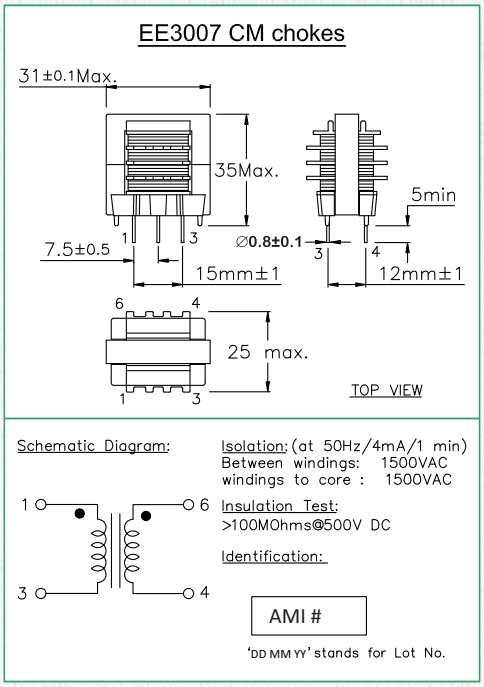

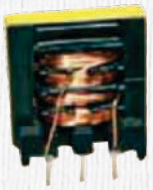

PART NUMBER	INDUCTANCE mH (Min)	CURRENT RATING Amps (Steady State)	LEAKAGE INDUCTANCE uH (Typical)	DC RESISTANCE Ohms (Max)
400101	0.680	5.00	16	0.025
400102	1.200	4.00	27	0.040
400103	2.200	3.00	47	0.085
400104	3.300	2.50	90	0.135
400105	8.200	1.75	180	0.260
400106	12.000	1.50	230	0.330
400107	18.000	1.20	375	0.500
400108	22.000	1.20	450	0.550
400109	27.000	1.00	575	0.700
400110	47.000	0.75	930	1.250

*RoHS compliance is available on most products, subject to our confirmation.

NOTE: Specifications subject to change without notice.

COMMON MODE CHOKES IN UT 20

Mechanical Details: (All dimensions in mm) Not to scale

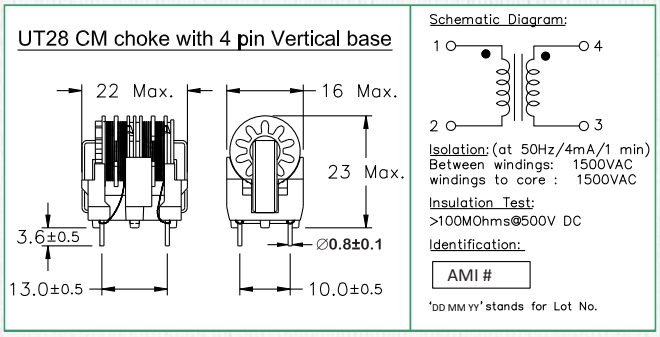

Electrical Detail

PART NUMBER	INDUCTANCE mH (Min)	CURRENT RATING Amps (Steady State)	LEAKAGE INDUCTANCE uH (Typical)	DC RESISTANCE Ohms (Max)
500101	0.75	1.50	20	0.120
500102	1.20	1.25	23	0.130
500103	1.80	1.00	32	0.185
500104	3.90	0.75	71	0.325
500105	5.60	0.50	105	0.500
500106	12.00	0.50	215	0.915
500107	14.00	0.40	275	1.000
500108	15.00	0.30	300	1.350
500109	22.00	0.25	430	1.950
500110	33.00	0.25	605	2.800
500111	47.00	0.20	930	3.900

COMMON MODE CHOKES IN ET 24

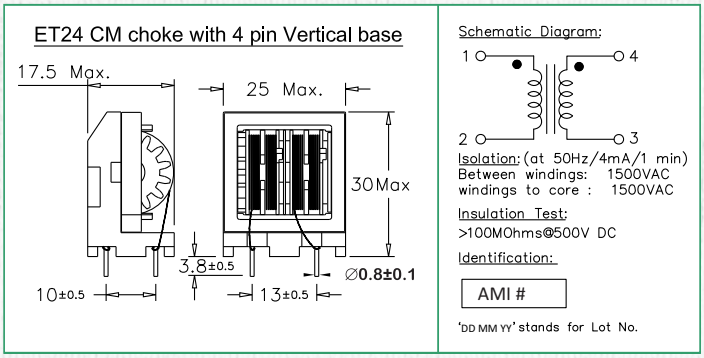

PART NUMBER	INDUCTANCE mH (Min)	CURRENT RATING Amps (Steady State)	LEAKAGE INDUCTANCE uH (Typical)	DC RESISTANCE Ohms (Max)
600101	3.3	2.00	54	0.140
600102	4.7	1.75	75	0.185
600103	8.2	1.25	126	0.280
600104	12	1.00	189	0.425
600105	15	0.75	233	0.535
600106	22	0.55	500	1.000
600107	33	0.55	514	1.225
600108	47	0.50	721	1.700

*RoHS compliance is available on most products, subject to our confirmation.

NOTE: Specifications subject to change without notice.

COMMON MODE CHOKES IN ET 28

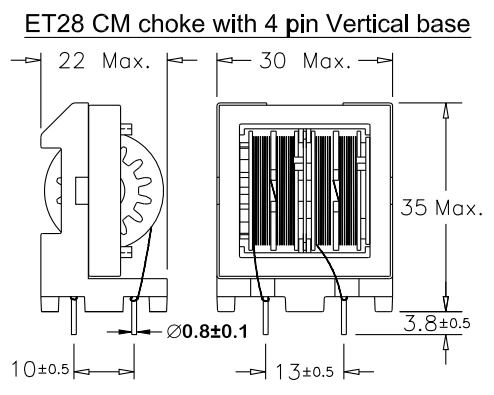

Schematic Diagram:

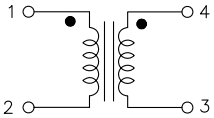

Isolation: (at 50Hz/4mA/1 min)
Between windings: 1500VAC
windings to core : 1500VAC

Insulation Test:
>100MOhms@500V DC

Identification:

AMI #

'DD MM YY' stands for Lot No.

PART NUMBER	INDUCTANCE mH (Min)	CURRENT RATING Amps (Steady State)	LEAKAGE INDUCTANCE uH (Typical)	DC RESISTANCE Ohms (Max)
700101	3.30	2.50	65	0.120
700102	8.20	2.00	120	0.200
700103	12.0	1.50	312	0.450
700104	18.0	1.25	208	0.315
700105	22.0	1.00	375	0.550
700106	27.0	1.00	394	0.600
700107	33.0	0.75	750	0.925
700108	47.0	0.75	789	1.080

COMMON MODE CHOKES IN ET 35

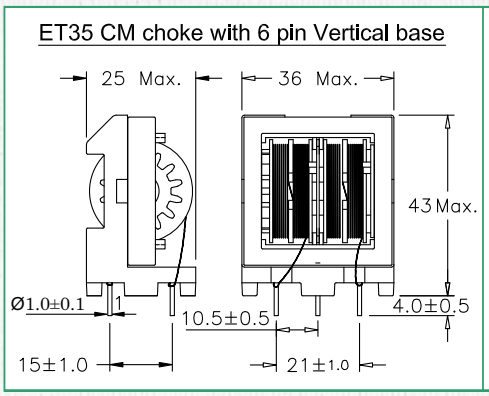

Schematic Diagram:

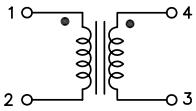

Isolation: (at 50Hz/4mA/1 min)
Between windings: 1500VAC
windings to core : 1500VAC

Insulation Test:
>100MOhms@500V DC

Identification:

AMI #

'DD MM YY' stands for Lot No.

PART NUMBER	INDUCTANCE mH (Min)	CURRENT RATING Amps (Steady State)	LEAKAGE INDUCTANCE uH (Typical)	DC RESISTANCE Ohms (Max)
800101	2.2	5.5	35	0.065
800102	3.9	4.5	55	0.085
800103	7.5	3.5	90	0.125
800104	8.2	3.0	110	0.160
800105	12.0	2.5	175	

*RoHS compliance is available on most products, subject to our confirmation.

NOTE: Specifications subject to change without notice.

DRUM CORE 6X8

Electrical Details

DRUM CORE	PART NUMBER	INDUCTANCE @1KHz 0.3V	RATED CURRENT (rms)	Isat	DC RESISTANCE Ohms (Max) @20ºC
6 X 8	DR 10010	3.3uH ± 20%	1A	2.5A	25mΩ
6 X 8	DR 10011	5.5uH ± 20%	750mA	2.1A	30mΩ
6 X 8	DR 10012	10uH ± 20%	1A	1.5A	60mΩ
6 X 8	DR 10013	13uH ± 20%	1.2A	1.3A	45mΩ
6 X 8	DR 10014	15uH ± 20%	0.5A	1.0A	110mΩ
6 X 8	DR 10015	100uH ± 20%	300mA	450mA	355mΩ
6 X 8	DR 10016	800uH ± 20%	150mA	170mA	3.3Ω

DRUM CORE 10X12

Electrical Details

DRUM CORE	PART NUMBER	INDUCTANCE @1KHz 0.3V	RATED CURRENT (rms)	Isat	DC RESISTANCE Ohms (Max) @20ºC
10 x 12	DR 20010	3.3uH ± 20%	3A	3A	10m
10 x 12	DR 20011	10uH ± 20%	2.9A	2.9A	15m
10 x 12	DR 20012	15uH ± 20%	2.3A	2.3A	35m
10 x 12	DR 20013	33uH ± 20%	1.5A	1.5A	45m
10 x 12	DR 20014	52uH ± 20%	1.3A	1.3A	80m
10 x 12	DR 20015	90uH ± 20%	900mA	900mA	120m
10 x 12	DR 20016	120uH ± 20%	850mA	850mA	140m
10 x 12	DR 20017	170uH ± 20%	350mA	800mA	310m
10 x 12	DR 20018	330uH ± 20%	400mA	500mA	475m
10 x 12	DR 20019	525uH±20%	425mA	425mA	575m
10 x 12	DR 20020	1mH±20%	290mA	290mA	1.3
10 x 12	DR 20021	1.5mH±20%	250mA	250mA	1.5
10 x 12	DR 20022	2.2mH±20%	175mA	200mA	3
10 x 12	DR 20023	3.3mH±20%	100mA	100mA	3.75
10 x 12	DR 20024	4.6mH±20%	100mA	100mA	5
10 x 12	DR 20025	10mH±20%	90mA	90mA	12

DRUM CORE 12X15

Electrical Details

DRUM CORE	PART NUMBER	INDUCTANCE @1KHz 0.3V	RATED CURRENT (rms)	Isat	DC RESISTANCE Ohms (Max) @20ºC
12X15	DR 30010	3uH±20%	6A	8A	5.5m
12X15	DR 30011	47uH±20%	1.5A	2.5A	75m
12X15	DR 30012	120uH±20%	1.6A	1.6A	110m

Mechanical Details: (All dimensions in mm) Not to scale

	6x8	10x12	12x15
A	ø8mm	ø12mm	ø14mm
B	10mm	14mm	16mm
C	3.0 ±1.0mm	6.0 ±1.0mm	10.0 ±1.0mm*
D	ø0.60 ±0.1mm	ø0.80 ±0.1mm	--

* for drums without pins.

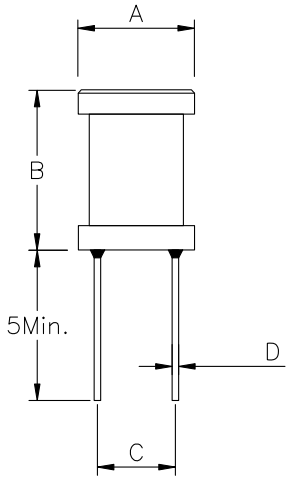

Applications:
- **Input & Output filters**
- **Non-isolated Buck Convertors etc.**

Note:
- Inductance Value is ≥90% of initial value at Isat.
- Drum chokes are available without pins in thicker winding wire sizes (indicated with *).
- Drum chokes are normally provided with heat shrink sleeve covering & can be encapsulated on request.

ROD CORE

Electrical Details

ROD CORE	PART NUMBER	INDUCTANCE @1KHz 0.3V	DC RESISTANCE	RATED CURRENT (rms)	A Max (mm)	B Max (mm)	C Max (mm)	DC RESISTANCE Ohms (Max) @20ºC
5 X 12	RD 10010	3.3uH±20%	20mΩ	1.5A	8	13	7.5±1.5	0.7
5 X 12	RD 10011	1uH±20%	3.5mΩ	5A	10	13	10±1.5	1.2
5 X 20	RD 10012	3.3uH±20%	13mΩ	3A	9	21	10±1.5	0.9
5 X 20	RD 10013	3.3uH±20%	7mΩ	6A	10	21	7.5±1.5	1.2
5 X 20	RD 10014	7.5uH±20%	30mΩ	1.5A	8	21	12.5±2.	0.7
5 X 20	RD 10015	5uH±20%	12mΩ	3A	9	21	10±1.5	0.9
6 X 32	RD 10016	10uH±20%	45mΩ	3A	11	33	11±2.0	0.9
6 X 32	RD 10017	10uH±20%	8mΩ	8A	12	33	10±1.5	1.3
10 X 30	RD 10018	5.0uH±30%	6mΩ	10A	15	31	12.5±2.0	1.8

Applications:
Input & Output filters.

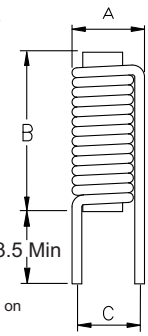

Note:
- Mechanical dimensions vary with core & wire size.
- Heat Shrink Sleeve covering on request.

*RoHS compliance is available on most products, subject to our confirmation.

NOTE: Specifications subject to change without notice.

(All dimensions in mm) Not to scale

EF12.6 (EE1304) 9 pin Horizontal bobbin

TR 500

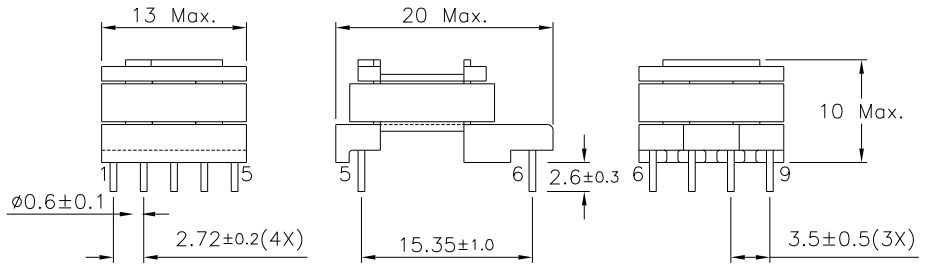

Bobbin width: 7.5mm, Winding width: 2mm, Core Ae: 12.4 aq.mm, Core Le: 29.6mm

EE1306 10 pin Vertical Bobbin

TR 501

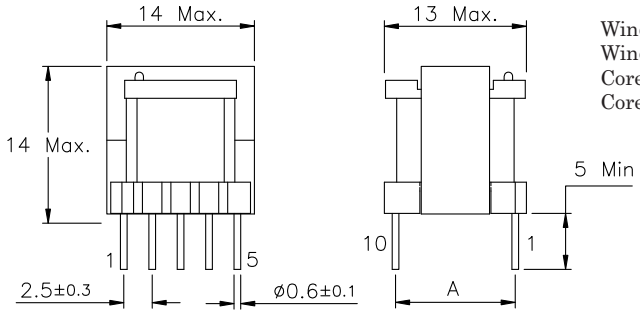

Winding Width: 7.5 mm
Winding Height: 2.1 mm
Core Ae: 22.4 Sq.mm
Core Le: 29.6 mm

Option	Dimn 'A'
Option 1	10.7±0.5
Option 2	8.2 ± 0.5

EE1605 10 pin Vertical Bobbin

TR 600

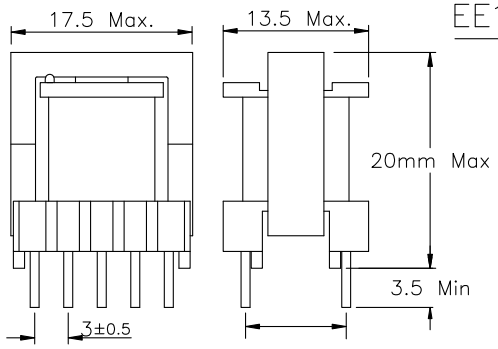

Winding Width: 9 mm
Winding Height: 2.5 mm
Core Ae: 19.3 Sq.mm
Core Le: 55.6 mm

Option	Dimn 'A'
Option 1	9.0±0.5
Option 2	10.0±0.5

EE1605 6 pin Vertical Bobbin

TR 601

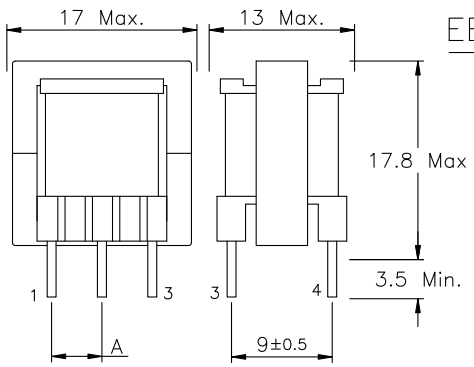

Winding Width: 9 mm
Winding Height: 2.5 mm
Core Ae: 19.3 Sq.mm
Core Le: 55.6 mm

Option	Dimn 'A'
Option 1	3.0±0.5
Option 2	4.5±0.5

*RoHS compliance is available on most products, subject to our confirmation.

NOTE: Specifications subject to change without notice.

FERRITE SERIES EE16

EE1605 8 pin Horizontal Bobbin

TR 602

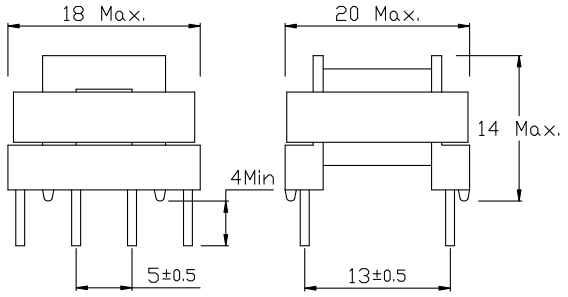

Winding Width: 9 mm
Winding Height: 2.5 mm
Core Ae: 19.3 Sq.mm
Core Le: 55.6 mm

FERRITE SERIES EE20

EE2005 10 pin Vertical Bobbin

TR 700

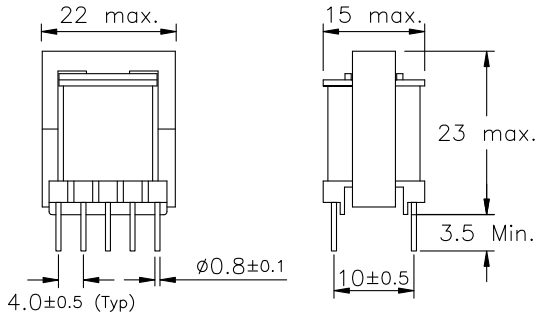

Winding Width: 12 mm
Winding Height: 3.5 mm
Core Ae: 33.5 Sq.mm
Core Le: 44.9 mm

EE2005 6 pin Vertical Bobbin

TR 701

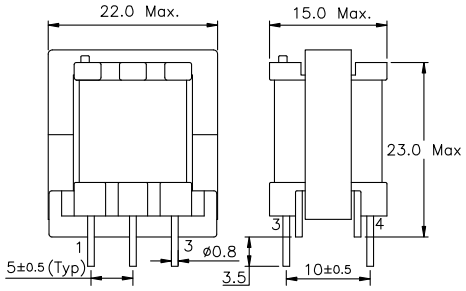

Winding Width: 12 mm
Winding Height: 3.5 mm
Core Ae: 33.5 Sq.mm
Core Le: 44.9 mm

EE2005 8 pin Horizontal Bobbin

TR 702

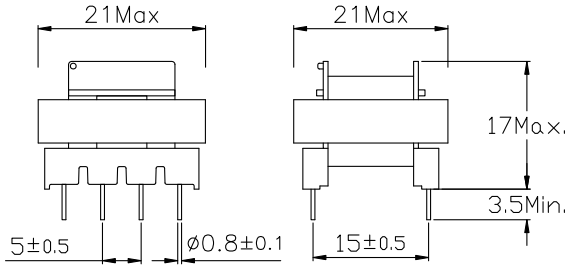

Winding Width: 12 mm
Winding Height: 3.5 mm
Core Ae: 33.5 Sq.mm
Core Le: 44.9 mm

*RoHS compliance is available on most products, subject to our confirmation.

NOTE: Specifications subject to change without notice.

(All dimensions in mm) Not to scale

EE2507 10 pin Vertical Bobbin

TR 800

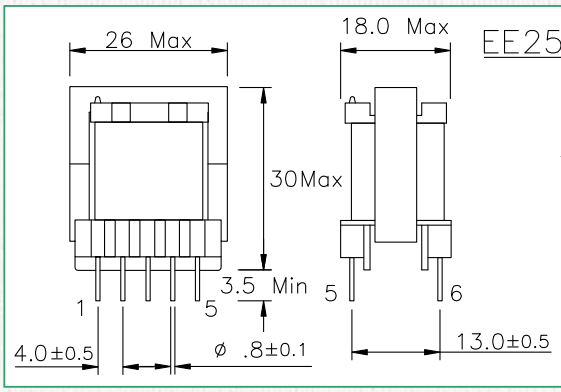

Winding Width: 15.5 mm
Winding Height: 4.0 mm
Core Ae: 52.5 Sq.mm
Core Le: 57.5 mm

EE2507 8 pin Vertical Bobbin

TR 801

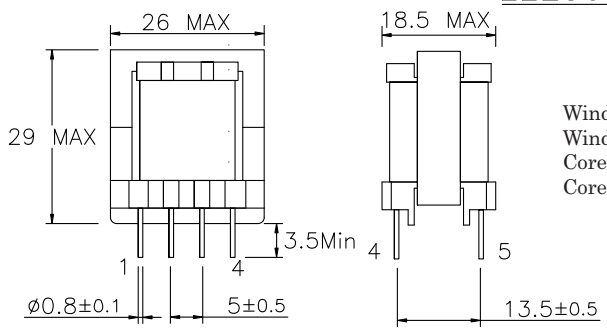

Winding Width: 15.5 mm
Winding Height: 4.0 mm
Core Ae: 52.5 Sq.mm
Core Le: 57.5 mm

EE2507 10 pin Horizontal Bobbin

TR 802

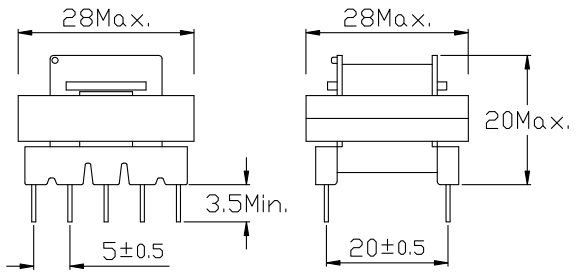

Winding Width: 15.5 mm
Winding Height: 4.0 mm
Core Ae: 52.5 Sq.mm
Core Le: 57.5 mm

EI30 10 pin Vertical Bobbin

TR 803

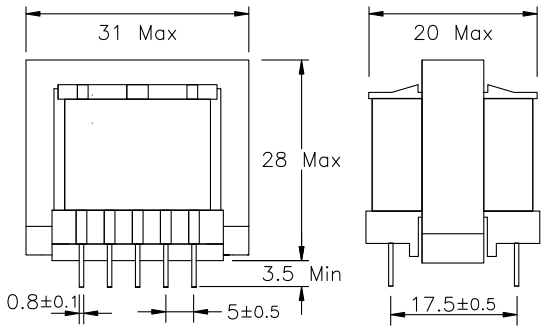

Winding Width: 14.0 mm
Winding Height: 4.0 mm
Core Ae: 110.4 Sq.mm
Core Le: 58.5 mm

*RoHS compliance is available on most products, subject to our confirmation.

NOTE: Specifications subject to change without notice.

FERRITE SERIES EE30

(All dimensions in mm) Not to scale

EE3007 12 pin Vertical Bobbin

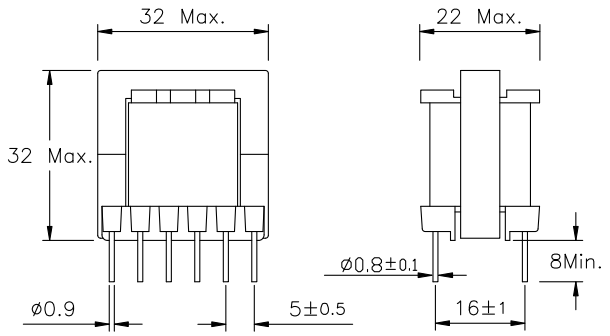

Winding Width: 17.0 mm
Winding Height: 5.3 mm
Core Ae: 60.0 Sq.mm
Core Le: 67 mm

EE3007 10 pin Horizontal Bobbin

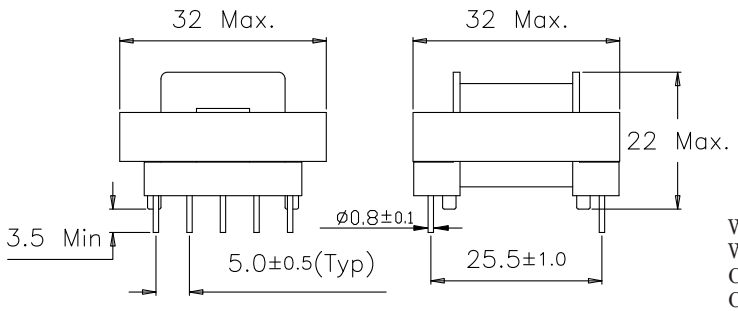

Winding Width: 17.0 mm
Winding Height: 5.3 mm
Core Ae: 60.0 Sq.mm
Core Le: 67 mm

FERRITE SERIES EI33

EI33 12 pin Bobbin

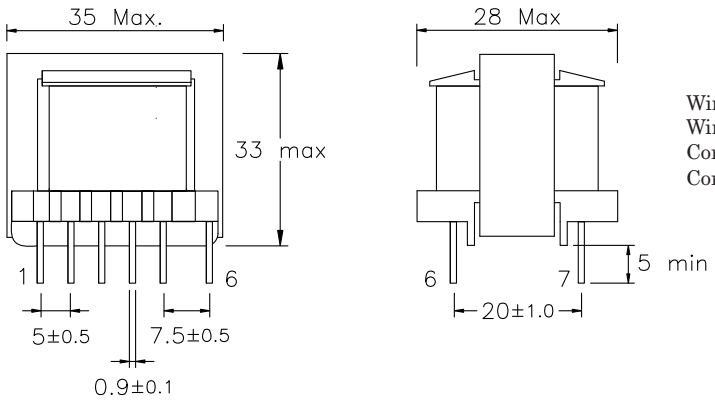

Winding Width: 15.5 mm
Winding Height: 6.0 mm
Core Ae: 118.1 Sq.mm
Core Le: 66.9 mm

*RoHS compliance is available on most products, subject to our confirmation.

NOTE: Specifications subject to change without notice.

FERRITE SERIES EI35

(All dimensions in mm) Not to scale

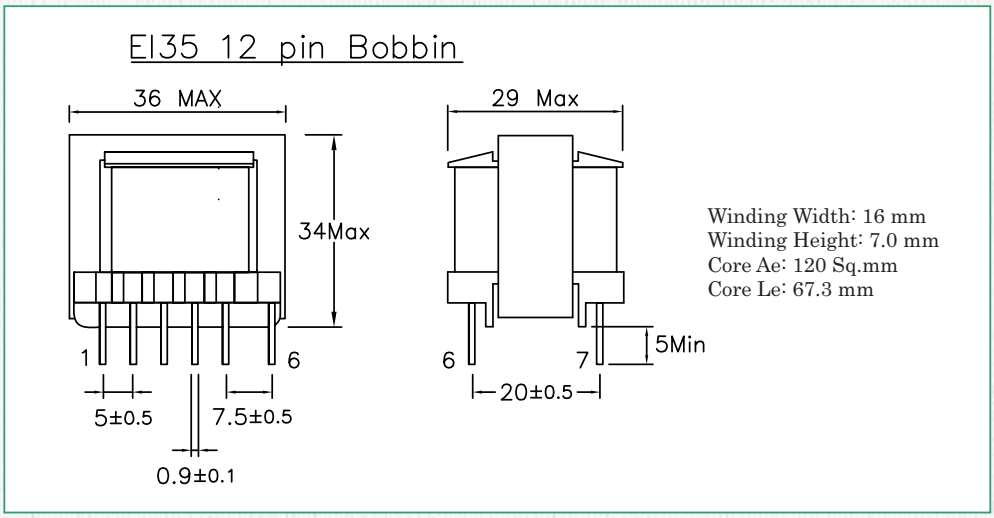

Winding Width: 16 mm
Winding Height: 7.0 mm
Core Ae: 120 Sq.mm
Core Le: 67.3 mm

FERRITE SERIES EI40

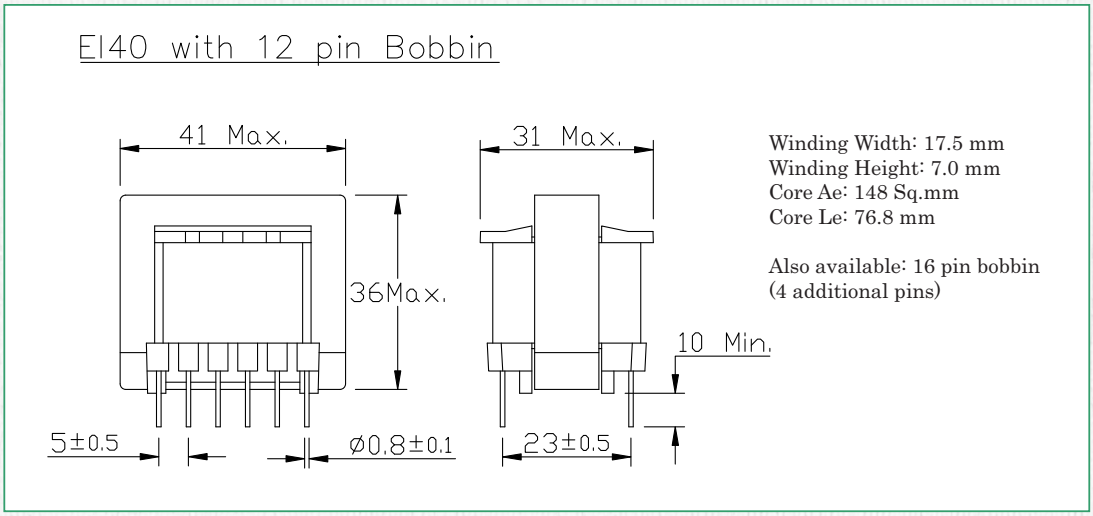

Winding Width: 17.5 mm
Winding Height: 7.0 mm
Core Ae: 148 Sq.mm
Core Le: 76.8 mm

Also available: 16 pin bobbin
(4 additional pins)

FERRITE SERIES EE42

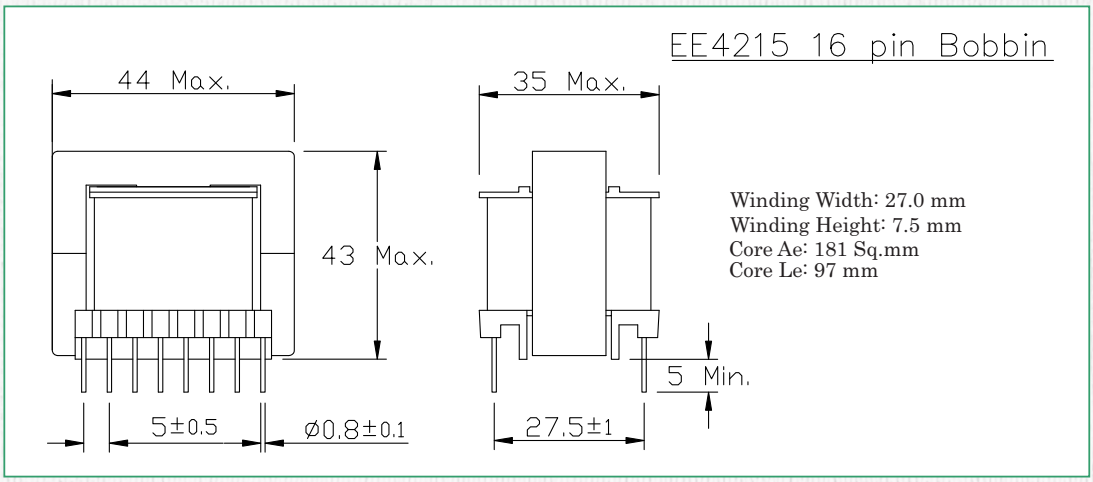

Winding Width: 27.0 mm
Winding Height: 7.5 mm
Core Ae: 181 Sq.mm
Core Le: 97 mm

*RoHS compliance is available on most products, subject to our confirmation.

NOTE: Specifications subject to change without notice.

FERRITE SERIES EE42

(All dimensions in mm) Not to scale

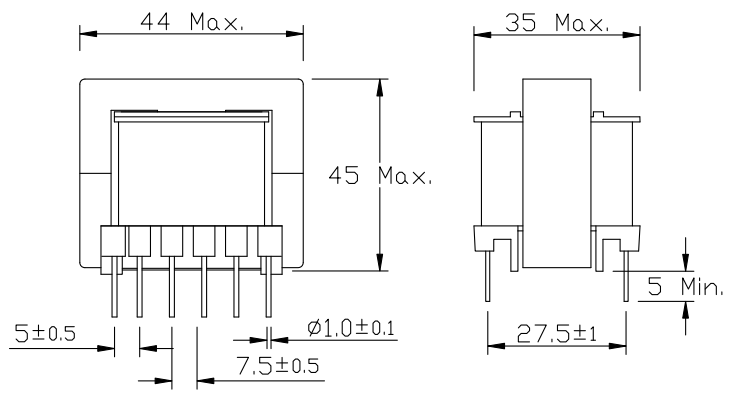

Winding Width: 27.0 mm
Winding Height: 7.5 mm
Core Ae: 240 Sq.mm
Core Le: 97 mm

FERRITE SERIES EER

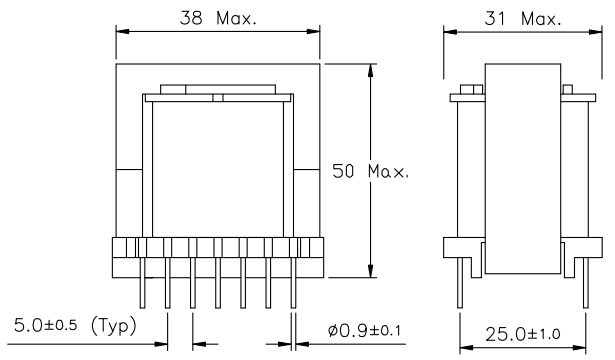

Winding Width: 29.0 mm
Winding Height: 7.5 mm
Core Ae: 111 Sq.mm
Core Le : 97 mm

*RoHS compliance is available on most products, subject to our confirmation.

NOTE: Specifications subject to change without notice.

(All dimensions in mm) Not to scale

EFD20 8 pin bobbin

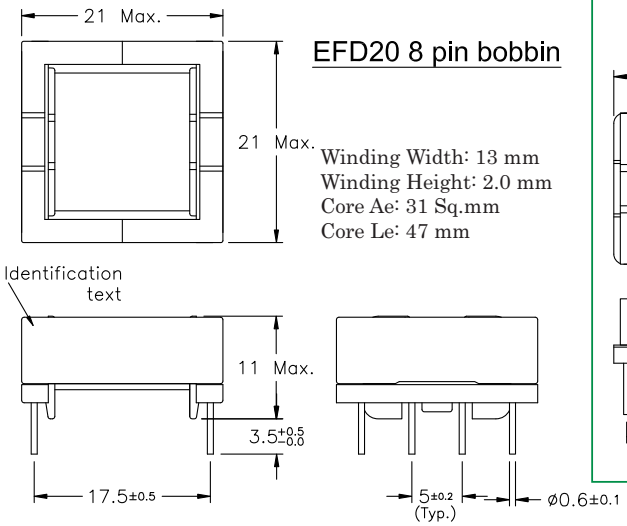

Winding Width: 13 mm
Winding Height: 2.0 mm
Core Ae: 31 Sq.mm
Core Le: 47 mm

EFD15 8 pin bobbin

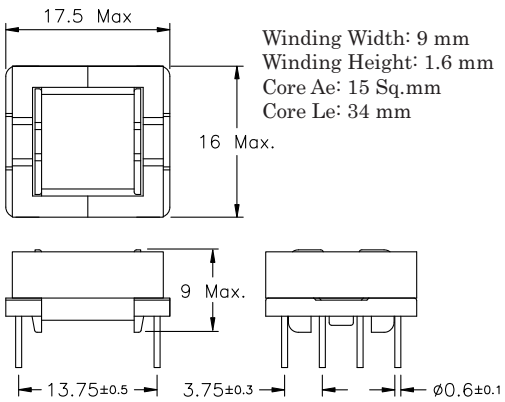

Winding Width: 9 mm
Winding Height: 1.6 mm
Core Ae: 15 Sq.mm
Core Le: 34 mm

EFD25 10 pin bobbin

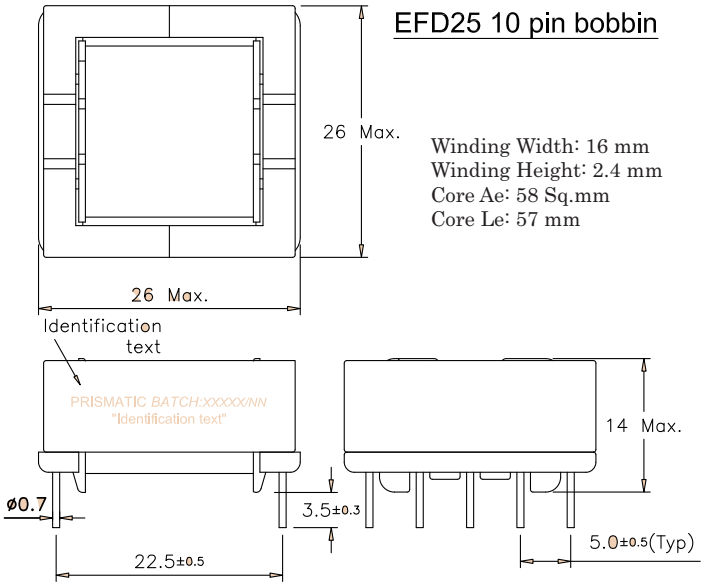

Winding Width: 16 mm
Winding Height: 2.4 mm
Core Ae: 58 Sq.mm
Core Le: 57 mm

EFD30 12 pin bobbin

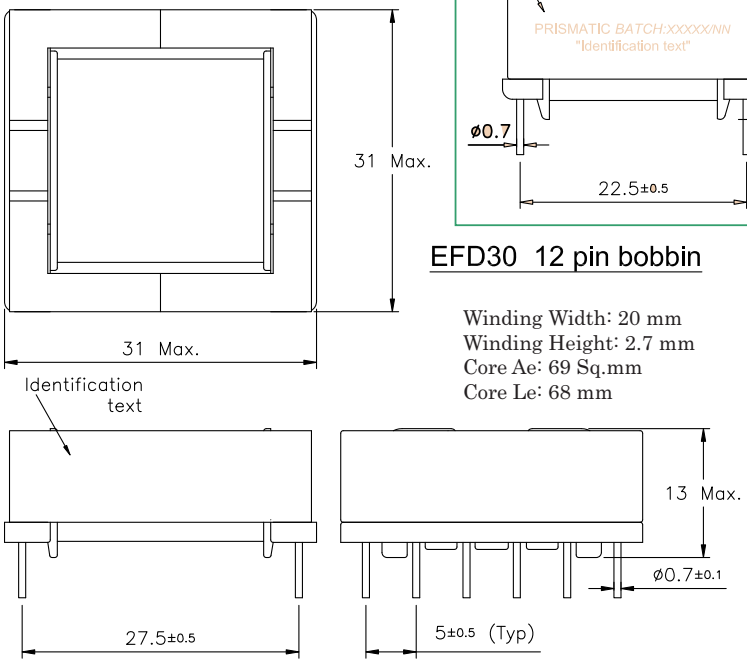

Winding Width: 20 mm
Winding Height: 2.7 mm
Core Ae: 69 Sq.mm
Core Le: 68 mm

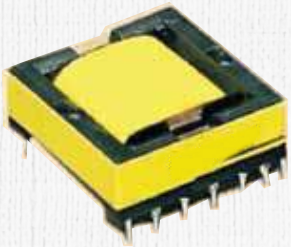

*RoHS compliance is available on most products, subject to our confirmation.

NOTE: Specifications subject to change without notice.

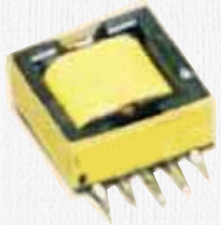

EFD15 10 pin SMD bobbin

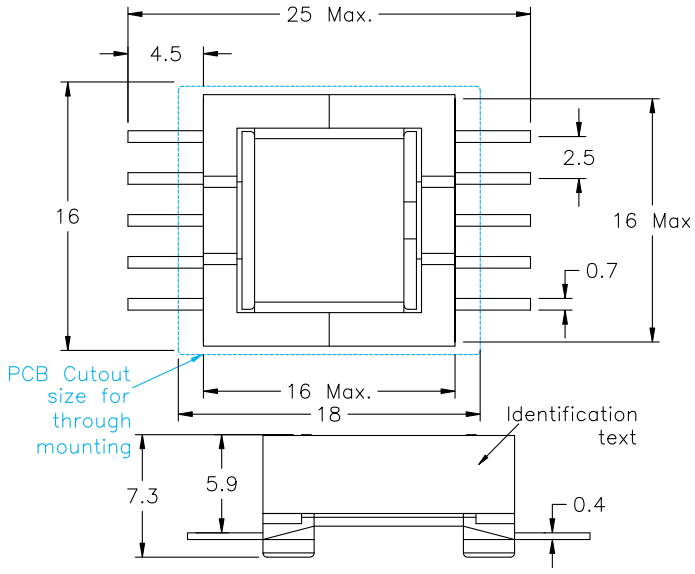

Winding Width: 9 mm
Winding Height: 1.6 mm
Core Ae: 15 Sq.mm
Core Le: 34 mm

EFD20 12 pin SMD bobbin

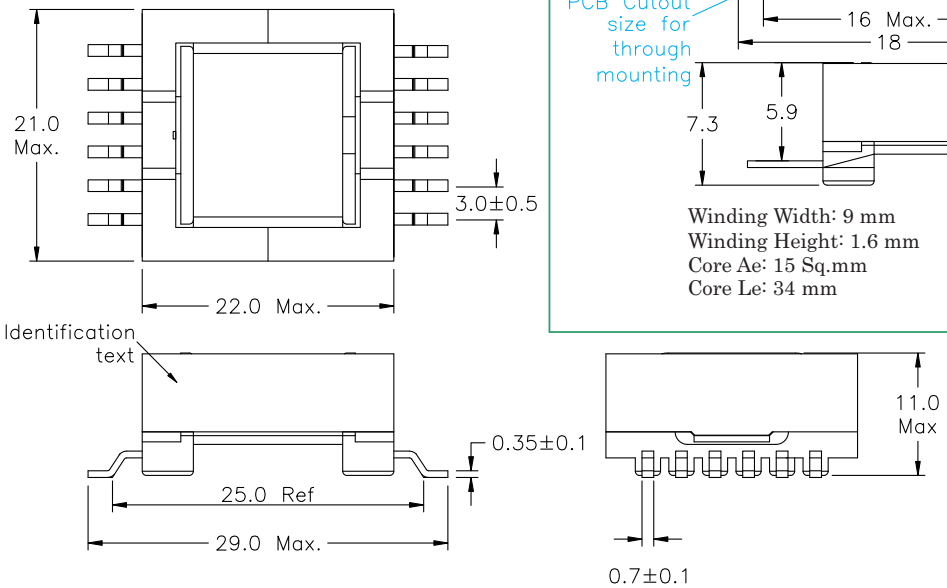

Winding Width: 13 mm
Winding Height: 2.0 mm
Core Ae: 31 Sq.mm
Core Le: 47 mm

EFD25 12 pin SMD bobbin

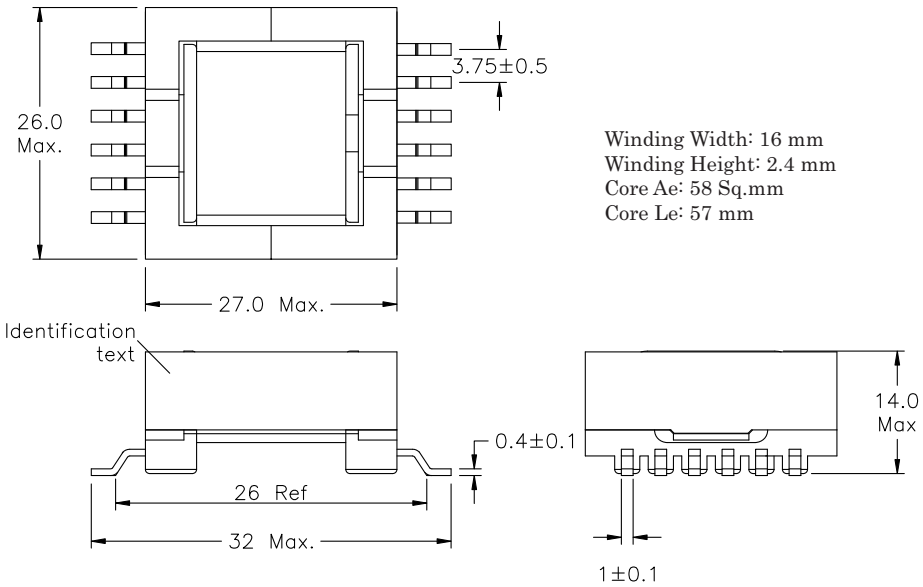

Winding Width: 16 mm
Winding Height: 2.4 mm
Core Ae: 58 Sq.mm
Core Le: 57 mm

*RoHS compliance is available on most products, subject to our confirmation.

NOTE: Specifications subject to change without notice.

*RoHS on request

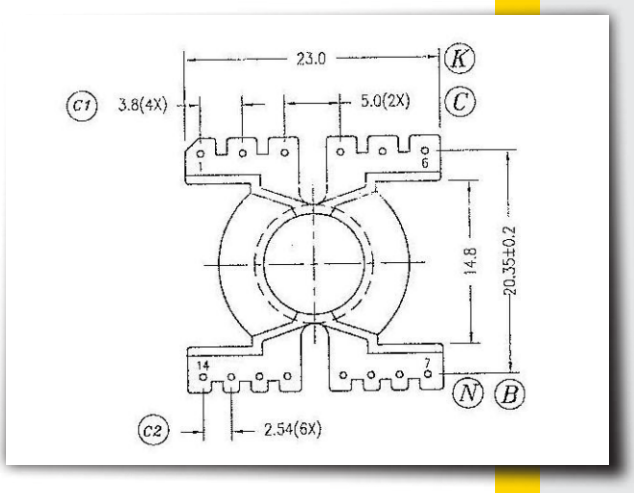

PQ-20X20

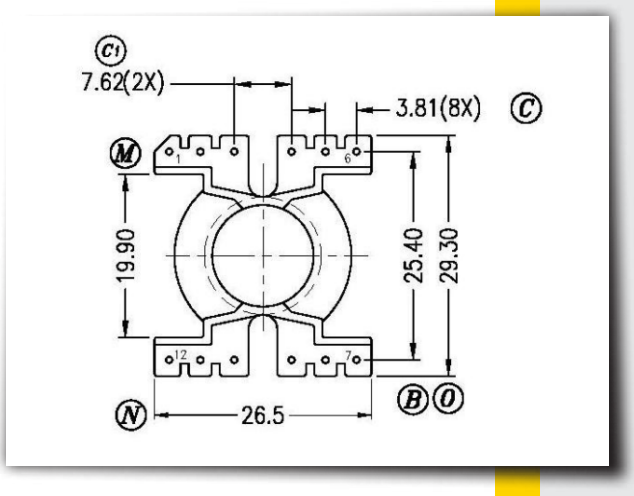

PQ-26X25

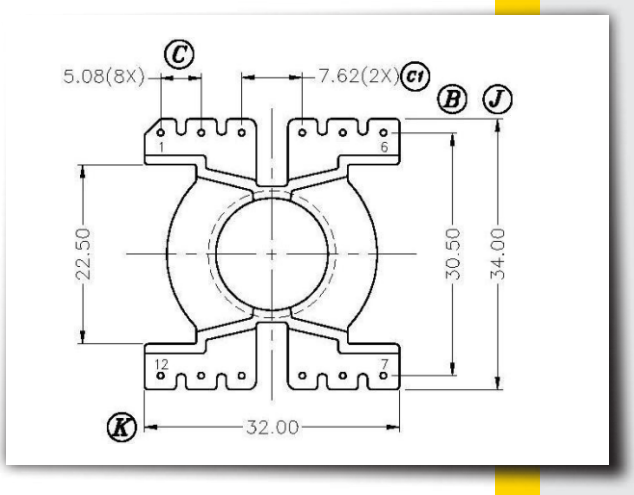

PQ-32X25

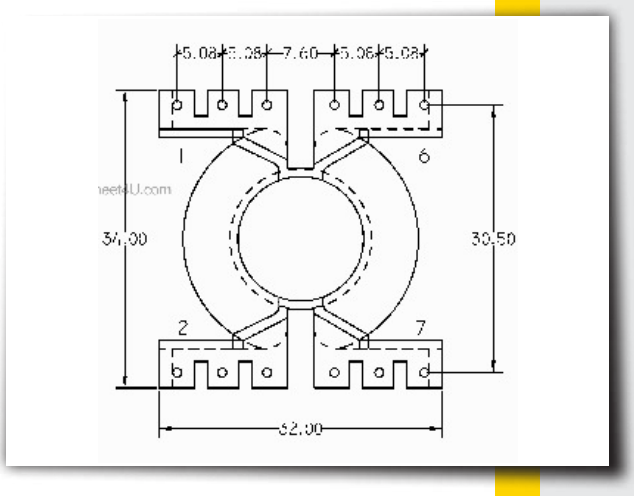

PQ-32X30

*RoHS on request

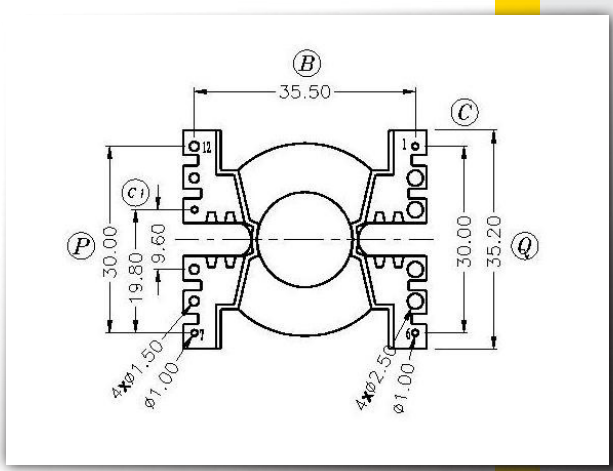

PQ-35X35

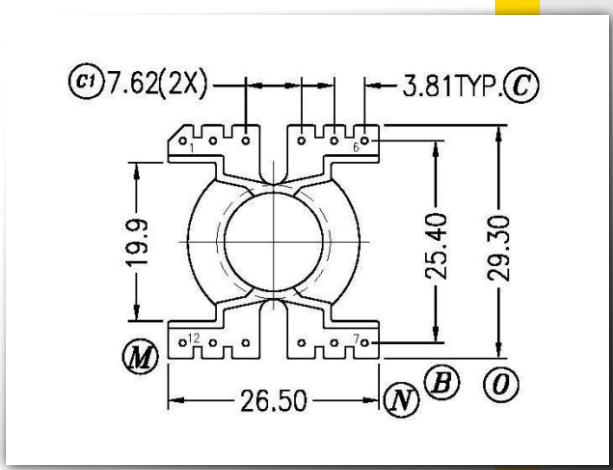

PQ-26X20

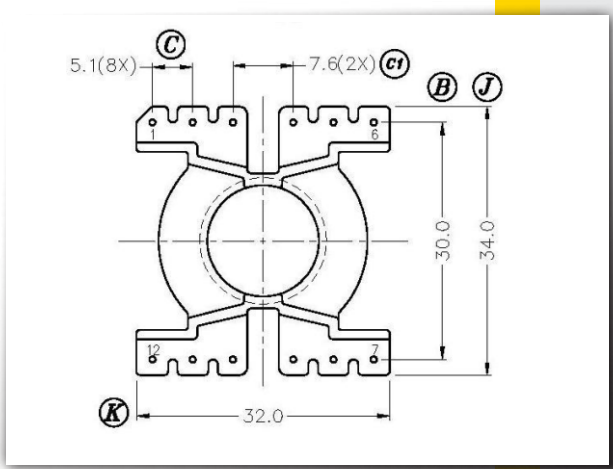

PQ-32X20

PQ-2625
PQ-2020
PQ-3225
PQ-2620

Angel
Angel
AN ISO 9001 : 2015 COMPANY
Angel
ANGEL MAGNETICS INDIA (P) LTD.
www.angelmagnetics.com

Our Teams

Angel Magnetics

A-35, Sector - 57, Noida, U. P. - 201301 India

+91 - 120 - 4516546, +91-9810573797,
+91-9810173797

vinod@angelmagnetics.com
usha@angelmagnetics.com

www.angelmagnetics.com